Nishishiba

Marine & Offshore Equipment

INDUCTION MOTOR
誘導電動機

Low Voltage Induction Motor

低圧誘導電動機

Voltage..... 440V

CONTENTS

SUMMARY *1*

STANDARD *2*

DATA *3*

CONSTRUCTION *4*

GENERAL

NISHISHIBA

Marine Three-phase Induction Motor, IEC Series Based Upon Advanced Design and Extensive Manufacturing Experience.

西芝の船用三相誘導電動機は ”船用電気機器トップメーカ” として長年月の豊富な経験と実績をもとに、船用専門の工場で、一般補機用、甲板機用、軸流内装形送風機用などあらゆる用途のものを設計、製作しております。

FEATURE

●Works certified by major classifications

JG:Japanese Government
NK:Nippon Kaiji Kyokai
ABS:American Bureau of Shipping
CR:China Corporation Register of Shipping
DNV:Det Norske Veritas
LR:Lloyd's Register of Shipping

●主要船級認定工場

JG, NK, ABS, CR, DNV, LR 認定工場に指定されております。

●IEC based design

Application of New JIS C4210 and JEM 1410 standardized in accordance with IEC extend the international interchangeability dimensions and characteristics.

●IEC規格に整合

IEC規格に整合性を持たせて制定されたJIS-C4210及JEM1410規格と完全に整合し,国際的互換性を有しています。

●Total quality control "ISO9001"

Total quality control system of our works guarantees highest quality, reliability and performance.

●厳密な品質管理

ISO9001システムの導入により,高品質,高信頼性及び高性能を実現しています。

●Advanced design

— Reliable insulation of Class B and Class F
  Frame number 71-180M:Class B insulation
  Frame number 180L & over: Class F insulation
— Quick start, small GD^2
  Aluminum cast rotor for 200kW and less.
  Refer to page 3.
— Maintenance free
  Prelubricated shielded ball bearing for bearing size 6315 and less. Refer to page 6 and 8.
— Marine use IP44 and IP22 enclosure
  IP44:Frame number 71 and over
  IP22:Frame number 225S and over

●最近の技術を駆使した新設計

— 高信頼のB種及びF種絶縁
  枠番号71-180M:B種絶縁
  180L以上:F種絶縁
— 200kW以下の機種はGD^2の小さいアルミキャストロートルを採用することで、始動性に優れています。
  詳細は3ページを参照下さい。
— ベアリングサイズ6315以下
  メンテナンスフリーのシールドベアリングを採用しています。
  詳細は6及び8ページを参照下さい。
— 舶用仕様のIP44及びIP22構造
  IP44:枠番号71以上
  IP22:枠番号225S以上

STANDARD SPECIFICATION AND OPTION

Following table shows the typical specification, other specification is also available.
下記の表は標準的な仕様を示しております。下記以外の仕様についても対応可能です。

ITEM	STANDARD SPECIFICATION	OPTION
1. Rule	JG, NK, ABS, BV, CCS, CR, DNV, GL, KR, LR	
2. Ambient conditions	Temp. 45℃ or 50℃ Relative humidity 95%	
3. Voltage,Frequency	AC450V 3 phase 60Hz	AC415V, 380V, 220V 50Hz
4. Output,Revolution	Refer to application table	200kW, 10P and over, Pole change, Flame Proof Type and etc.
5. Insulation class	Frame No. (F/No.) 180M and less : Class B Frame No. (F/No.) 180L and over : Class F	
6. Duty	Continuous	Short time rating
7. Enclosure	Protected Drip-proof Type Protection : IP22 Cooling : IC01 Totally Enclosed Fan Cooled, Splash Proof Type Protection : IP44 Cooling : IC411	Totally Enclosed, Splash Proof Type Protection : IP44 Cooling : IC410 Deck Water Tight Type Protection : IP56 Cooling : IC410, IC411
8. Starting	Direct-On-Line	Star-Dalta
9. Accessory	Cable gland on terminal box and solderless terminal Shaft end Key	Space heater, High temp. sensor for stator winding

項目	標準仕様	オプション
1. 適用規格	JG, NK, ABS, BV, CCS, CR, DNV, GL, KR, LR	
2. 周囲条件	温度 45℃又は50℃ 相対湿度 95%	
3. 定格電圧 定格周波数	AC440V 3相 60Hz	AC415V, 380, 220V 50Hz
4. 出力, 回転数	別紙適応表による。	200kW超過。 10極以上, 極数変換形, 各種防爆形
5. 絶縁種別	枠番号 180M以下 : B種 枠番号 180L以下 : F種	
6. 時間定格	連続	短時間定格
7. 外被構造	保護防滴形 : 保護方式 IP22 冷却方式 IC01 全閉防まつ形外扇付 : 保護方式 IP44 冷却方式 IC411	全閉形 : 保護方式 IP44 冷却方式 IC410 甲板防水形 : 保護方式 IP56 冷却方式 IC410, IC411
8. 始動方式	直入れ	スター・デルタ
9. 付属品	端子箱に防水形ケーブルグランド及び圧着端子, 軸端キー	スペースヒータ, コイル高温警報用センサ

TYPE-FORM

NTI □ — □ □ □ 5

- NTI — Nishishiba Three phase Induction motor
- □ — Rotor Construction
  - K : Cage rotor
  - KK : Double cage rotor
  - KE : Deep groove cage rotor
- □ — Cooling
  - F : Frame surface, outer fan cooled
  - V : Free circulation
  - E : Frame surface cooled no outer fan
  - R : Air/Water cooler mounted
- □ — Output take off
  - C : By coupling
  - B : Belt drive
  - S : Auxiliary machine on shaft
- □ — Mounting
  - K : Horizontal
  - T : Vertical
  - KL : Horizontal with Flange
- 5 — 5 : Marine use

APPLICATION FOR OUTPUT AND FRAME NUMBER

Following table shows the typical specification, other specification is also available.
下記の表は標準的な仕様を示しております。下記以外の仕様についても対応可能です。

■ TYPE

Protected Drip-Proof Type (IP22, IC01)
保護防滴形
（IP22, IC01）

Totally Enclosed Fan Cooled, Splash Proof Type (IP44, IC411)
全閉防まつ形外扇付
（IP44, IC411）

Output	2P		4P		6P		8P		2P		4P		6P		8P	
(kW)	F/No.	Flange	F/No.	Flange	F/No.	Flange	F/No.	Flange	F/No.	Flange	F/No.	Flange	F/No.	Flange	F/No.	Flange
0.4									71	FF130	71	FF130	80	FF165		
0.75									80	FF165	80	FF165	90L	FF165		
1.5									90L	FF165	90L	FF165	100L	FF215	112M	FF215
2.2									90L	FF215	100L	FF215	112M	FF215	132S	FF265
3.7									112M	FF215	112M	FF215	132S	FF265	132M	FF265
5.5									132S	FF265	132S	FF265	132M	FF265	160M	FF300
7.5									132S	FF265	132M	FF265	160M	FF300	160L	FF300
11									160M	FF300	160M	FF300	160L	FF300	180M	FF350
15									160M	FF300	160L	FF300	180M	FF350	180L	FF350
18.5									160L	FF350	180M	FF350	180L	FF350	200L	FF400
22									180M	FF350	180M	FF350	180L	FF350	200L	FF400
30									180L	FF350	180L	FF350	200L	FF400	225S	FF500
37							225S	FF500	200L	FF400	200L	FF400	200L	FF400	250S	FF500
45							225M	FF500	200L	FF400	200L	FF400	225S	FF500	250M	FF500
55					225S	FF500	250S	FF600	225S	FF500	225S	FF500	250S	FF500	280S	FF600
75	225S	FF500	225S	FF500	225M	FF500	250M	FF600	250S	FF500	250S	FF500	250M	FF500	280M	FF600
90	225M	FF500	225M	FF500	250S	FF600	280S	FF600	250M	FF500	250M	FF500	280S	FF600	280MD	FF740
110	250S	FF600	250S	FF600	250M	FF600	280M	FF600	280S	FF600	280S	FF600	280M	FF600	280MD	FF740
132	250M	FF600	250M	FF600	280S	FF600	–	–	280M	FF600	280M	FF600	280MD	FF740	–	–
160	280S	FF600	280S	FF600	280M	FF600	–	–	280MD	FF740	280MD	FF740	280MD	FF740	–	–
200	280M	FF600	280M	FF600	–	–	–	–	280MD	FF740	280MD	FF740	–	–	–	–

APPLICATION OF INSULATION CLASS, ROTOR CAGE & BEARING

Following table shows the insulation class, rotor cage and bearing type.
下記の表は絶縁、回転子構造、及び軸受の種類を示しております。

■ TYPE

Protected Drip-Proof Type (IP22, IC01)
保護防滴形
（IP22, IC01）

Totally Enclosed Fan Cooled, Splash Proof Type (IP44, IC411)
全閉防まつ形外扇付
（IP44, IC411）

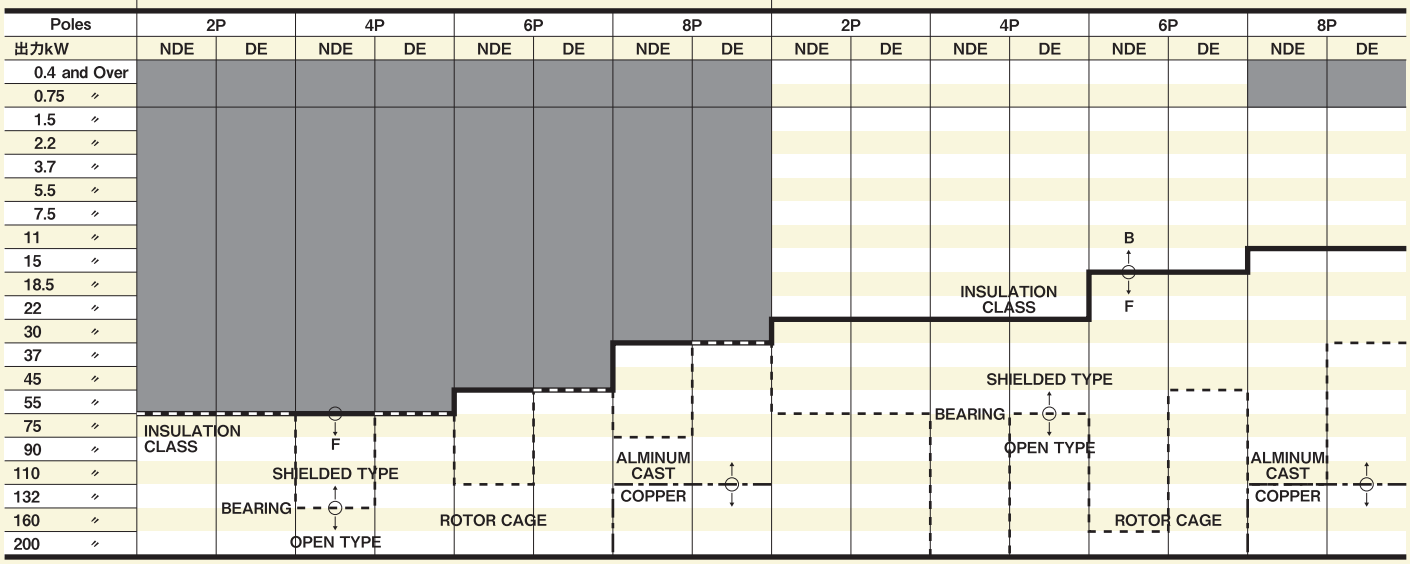

ASSEMBLY

■ TYPE

Totally Enclosed Fan Cooled, Splash Proof Type (Horizontal Type) (IP44, IC411)
全閉型まつ形外扇付横形
(IP44, IC411)

P.No.	NAME	MATERIAL
1	Retaining Ring	Spring Steel
2	Fan	Polyamideresin with Glass or Cast Iron
3	Fan Cover	Mild Steel
4	Wave Washer	Carbon Tool Steel
5	Ball Bearing	Shielded or Open type
6	Bearing Bracket	Cast Iron
7	Rotor Bar & End Ring	Aluminium
8	Stator Coil	Copper
9	Stator Frame	Cast Iron
10	Eye Bolt	Cast Iron
11	Stator Core	Silicon Steel
12	Rotor Core	Silicon Steel
13	Ball Bearing	Shielded or Open Type
14	Bearing Bracket	Cast Iron
15	Shaft	Carbon Steel
16	Grease Nipple	Brass
17	Bearing Cover	Cast Iron
18	Retaining Ring	Spring Steel
19	Cover(Grease Relief)	Mild Steel
20	Guid Plate	Mild Steel

Fig. 1

Totally Enclosed Fan Cooled, Splash Proof Type (Vertical Type) (IP44, IC411)
全閉型まつ形外扇付立形
(IP44, IC411)

P.No.	NAME	MATERIAL
1	Protection Cover	Mild Steel
2	Retaining Ring	Spring Steel
3	Fan Cover	Mild Steel
4	Fan	Polyamideresin with Glass or Cast Iron
5	Wave Washer	Carbon Tool Steel
6	Bearing Bracket	Cast Iron
7	Ball Bearing	Shielded or Open type
8	Stator Frame	Cast Iron
9	Eye Bolt	Cast Iron
10	Stator Core	Silicon Steel
11	Rotor Core	Silicon Steel
12	Stator Coil	Copper
13	Rotor Bar & End Ring	Aluminium
14	Bearing Bracket	Cast Iron
15	Ball Bearing	Shielded or Open Type
16	Shaft	Carbon Steel
17	Grease Nipple	Brass
18	Collar	Cast Iron
19	Bearing Cover	Cast Iron
20	Retaining Ring	Spring Steel
21	Cover(Grease Relief)	Mild Steel

Fig. 2

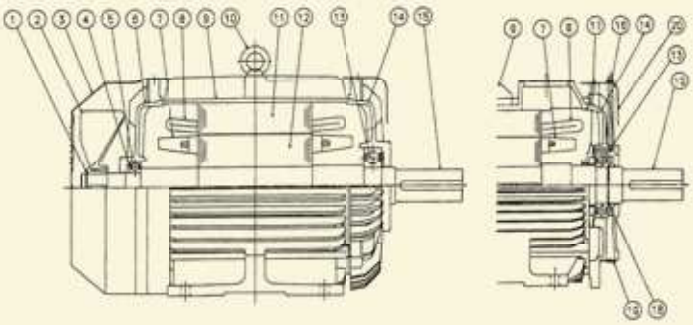

Fig. 1

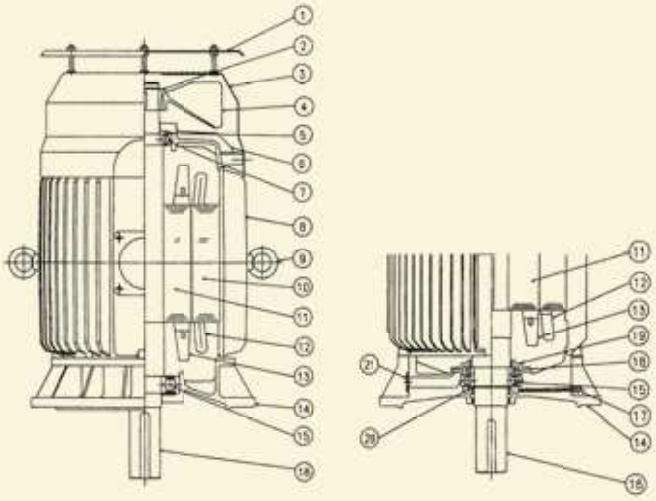

Fig. 2

■ **TYPE**

Protected Drip-proof Type (Horizontal Type)
(IP22, IC01)
保護防滴形横型
（IP22, IC01）

P.No.	NAME	MATERIAL
1	Plug	Mild Steel
2	Bearing Bracket	Cast Iron
3	Wave Washer	Carbon Tool Steel
4	Ball Bearing	Shielded or Open type
5	Slinger	Mild Steel
6	Stator Spaider	Cast Iron
7	Stator Core	Silicon Steel
8	Rotor Core	Silicon Steel
9	Rotor Bar & End Ring	Aluminium
10	Stator Coil	Copper
11	Fan	Cast Iron
12	Bearing Cover	Cast Iron
13	Grease Nipple	Brass
14	Ball Bearing	Open Type
15	Bearing Bracket	Cast Iron
16	Retaining Ring	Spring Steel
17	Shaft	Carbon Steel
18	Guard	Mild Steel
19	Cover	Mild Steel
20	Bearing Cover	Cast Iron

Fig. 3

Protected Drip-proof Type (Vertical Type)
(IP22, IC01)
保護防滴立型
（IP22, IC01）

P.No.	NAME	MATERIAL
1	Plug	Mild Steel
2	Bearing Bracket	Cast Iron
3	Wave Washer	Carbon Tool Steel
4	Ball Bearing	Shielded or Open type
5	Guard	Mild Steel
6	Slinger	Mild Steel
7	Stator Spaider	Cast Iron
8	Stator Core	Silicon Steel
9	Rotor Core	Silicon Steel
10	Rotor Bar & End Ring	Aluminium
11	Stator Coil	Copper
12	Fan	Cast Iron
13	Bearing Cover	Cast Iron
14	Grease Nipple	Brass
15	Collar	Cast Iron
16	Ball Bearing	Open Type
17	Bearing Bracket	Cast Iron
18	Retaining Ring	Spring Steel
19	Shaft	Carbon Steel
20	Guard	Mild Steel
21	Cover	Mild Steel
22	Retaining Ring	Spring Steel
23	Collar	Cast Iron
24	Bearing Cover	Cast Iron

Fig. 4

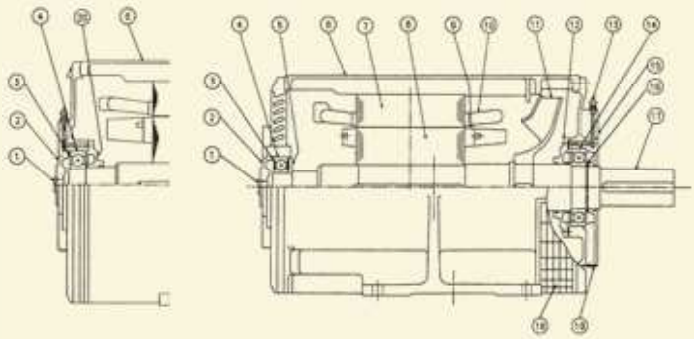

Fig. 3

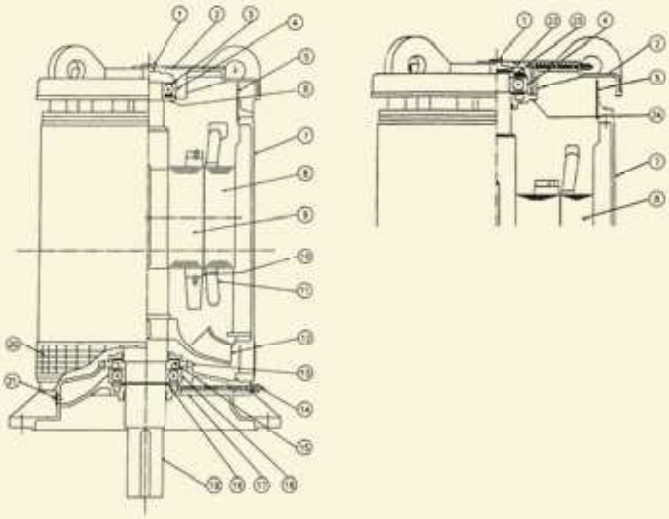

Fig. 4

SPECIFICATION AND DIMENSIONS

■ **TYPE**
Totally Enclosed Fan Cooled,
Splash Proof Type (Horizontal Type) (IP44, IC411)
全閉防まつ形外扇付横形(IP44, IC411)

POLES	OUTPUT (kW)	SPEED (min⁻¹)	AMPS (A)	INSU. CLASS	BEARING N.D.E.	BEARING D.E.	MASS (kg)	FRAME NO.
2	0.4	3480	0.9	B	6203 ZZCM	6203 ZZCM	9.5	71
4	0.4	1700	1					
2	0.75	3450	1.5	B	6204 ZZCM	6204 ZZCM	14	80
4	0.75	1700	1.7				15.5	
6	0.4	1100	1.2				15	
2	1.5	3450	2.8	B	6205 ZZCM	6205 ZZCM	22	90L
2	2.2	3450	3.9				23.5	
4	1.5	1715	3.1				23	
6	0.75	1135	2				22	
4	2.2	1720	4.2	B	6205 ZZCM	6206 ZZCM	30	100L
6	1.5	1135	3.4				30.5	
2	3.7	3480	6.4	B	6206 ZZCM	6207 ZZCM	37.5	112M
4	3.7	1730	6.7				41.5	
6	2.2	1150	4.5				41	
8	1.5	850	3.8				44	
2	5.5	3490	9.2	B	6208 ZZCM	6308 ZZCM	62.5	132S
2	7.5	3490	12.1				70	
4	5.5	1740	9.8				64.5	
6	3.7	1160	7.4				61	
8	2.2	850	5.3				63	
4	7.5	1740	12.8	B	6208 ZZCM	6308 ZZCM	76	132M
6	5.5	1160	10.5				78	
8	3.7	850	9.0				81	
2	11	3520	18.2	B	6208 ZZCM	6310 ZZC3	102	160M
2	15	3520	24				105	
4	11	1750	18.8		6208 ZZCM	6310 ZZCM	109	
6	7.5	1160	13.6				105	
8	5.5	850	11.2				110	
2	18.5	3520	29	B	6208 ZZCM	6310ZZC3	136	160L
4	15	1750	25			6310 ZZCM	131	
6	11	1160	19.5				129	
8	7.5	860	15.1				141	
2	22	3540	36	B	6210ZZC3	6212ZZC3	170	180M
4	18.5	1755	31.5		6210 ZZC3	6310 ZZC3	155	
4	22	1755	36.5				165	
6	15	1170	26.5				160	
8	11	875	22.5					

POLES	OUTPUT (kW)	SPEED (min⁻¹)	AMPS (A)	INSU. CLASS	BEARING N.D.E.	BEARING D.E.	MASS (kg)	FRAME NO.
2	30	3540	48.5	F	6210ZZC3	6212ZZC3	190	180L
4	30	1755	49.5		6210 ZZC3	6312 ZZC3	195	
6	18.5	1170	32				185	
6	22	1170	38.5				195	
8	15	875	30					
2	37	3540	58	F	6312 ZZC3	6312 ZZC3	245	200L
2	45	3520	70				260	
4	37	1755	61.5		6312 ZZC3	6313 ZZC3	250	
6	30	1170	52.5					
8	18.5	875	36.5					
4	45	1755	74		6312 ZZC3	6313 ZZC3	265	
6	37	1170	63				270	
8	22	870	43					
2	55	3540	86	F	6212ZZC3	6312ZZC3	315	225S
4	55	1760	89		6212 ZZCM	6315 ZZCM	335	
6	45	1175	75				330	
8	30	870	56					
2	75	3570	117	F	6312C3	6312C3	470	250S
4	75	1780	121		6217 ZZCM	6218CM		
6	55	1185	91.2					
8	37	890	70.2				500	
2	90	3570	138	F	6312C3	6212C3	520	250M
4	90	1780	142		6217 ZZCM	6218CM	530	
6	75	1185	123				550	
8	45	885	84.6					
2	110	3565	169	F	6312C3	6312C3	630	280S
4	110	1780	168		6217 ZZCM	6220CM	640	
6	90	1185	150				680	
8	55	885	108				690	
2	132	3565	199	F	6312C3	6312C3	680	280M
4	132	1775	197		6217 ZZCM	6220CM	720	
6	110	1185	183				740	
8	75	885	142					
2	160	3570	243	F	6312C3	6312C3	780	280MD
2	200	3575	304				850	
4	160	1785	246		6217 ZZCM	6220CM	810	
4	200	1780	305				830	
6	132	1185	215				780	
6	160	1185	257				840	
8	90	890	168				790	
8	110	885	203				880	

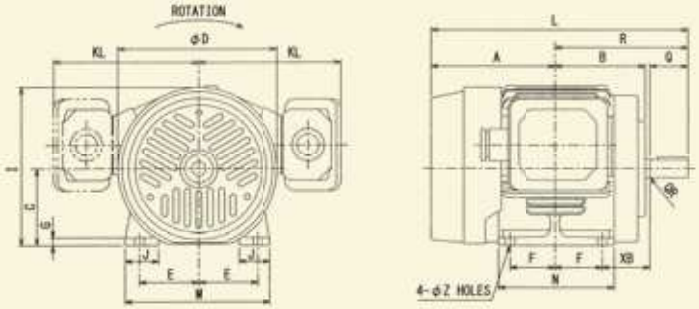

Fig. 1

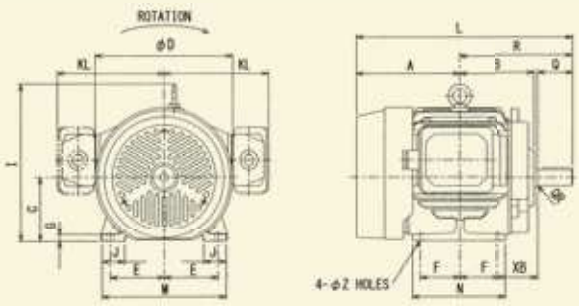

Fig. 2

FRAME NO.	A	B	C	D	E	F	G	H	J	K	L	M	N	P	KL	Q	R	φS	KEY W	KEY T	KEY U	φZ	XB	QR	OUTLINE
71	121	85	71	150	56	45	8	148	28	—	241	140	120	—	146	30	120	14j6	5	5	3	7	45	1.3	Fig.1
80	133	95	80	170	62.5	50	8	165	35	—	273	155	125	—	156	40	140	19j6	6	6	3.5	10	50	0.5	
90L	158.5	113.5	90	202	70	62.5	10	191	40	—	327	176	149	—	170	50	168.5	24j6	8	7	4	10	56	0.5	Fig.2
100L	173	128	100	202	80	70	12	242	40	—	366	200	168	—	174	60	193	28j6	8	7	4	12	63	0.5	
112M	183	134	112	243	95	70	12	274	40	—	383	220	168	—	190	60	200	28j6	8	7	4	12	70	1.5	
132S	210	152	132	284	108	70	15	325	50	—	449	260	175	—	264	80	239	38k6	10	8	5	12	89	0.5	Fig.3
132M	229	171	132	284	108	89	15	325	50	—	487	260	213	—	264	80	258	38k6	10	8	5	12	89	0.5	
160M	280	205	160	323	127	105	18	373	60	—	603	308	250	—	284	110	323	42k6	12	8	5	14.5	108	2	
160L	302	227	160	323	127	127	18	373	60	—	647	308	294	—	284	110	345	42k6	12	8	5	14.5	108	2	
180M	320	235.5	180	382	139.5	120.5	20	431	60	82.5	671.5	324	286	—	340	110	351.5	48k6	14	9	5.5	14.5	121	0.5	Fig.4
180L	339	254.5	180	382	139.5	139.5	20	431	60	82.5	709.5	324	324	—	340	110	370.5	55m6	16	10	6	14.5	121	1.5	
200L	374	279.5	200	420	159	152.5	20	470	80	80	769.5 799.5	378	360	—	360	110 140	395.5 425.5	55m6 60m6	16 18	10 11	6 7	18.5	133	1.5	
225S	380.5	286	225	464	178	143	22	517	80	120	782.5 812.5	416	366	—	385	110 140	402 432	55m6 65m6	16 18	10 11	6 7	18.5	149	1.5	
250S	454.5	298	250	535	203	155.5	30	510	100	130	888 918	486	411	748	—	110 140	433.5 463.5	55m6 75m6	16 20	10 12	6 7.5	24	168	1	Fig.5
250M	455.5	317	250	535	203	174.5	30	510	100	130	908 938	486	449	726 718 748	—	110 140	452.5 482.5	55m6 75m6	16 20	10 12	6 7.5	24	168	1	
280S	462	348.5	280	587	228.5	184	30	580	110	130	946 1006	560	448	788 818	—	110 170	484 544	55m6 85m6	16 22	10 14	6 9	24	190	1	
280M	476.5	374	280	587	228.5	209.5	30	580	110	130	986 1046	560	499	788 818	—	110 170	509.5 569.5	55m6 85m6	16 22	10 14	6 9	24	190	1	
280MD	596.5	374	280	587	228.5	209.5	30	580	110	181 K2:130	1106 1166	560	499	818 850 788	—	110 170	509.5 569.5	55m6 85m6	16 22	10 14	6 9	24	190	1	Fig.6

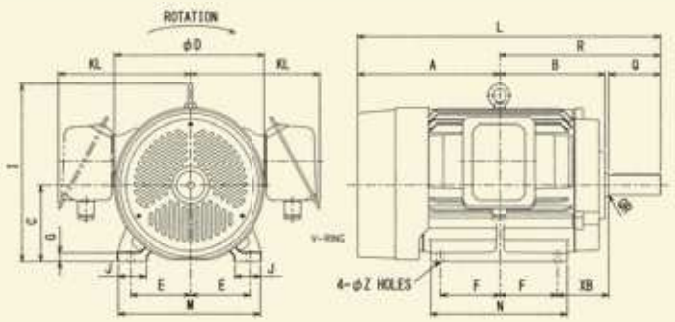

Fig. 3

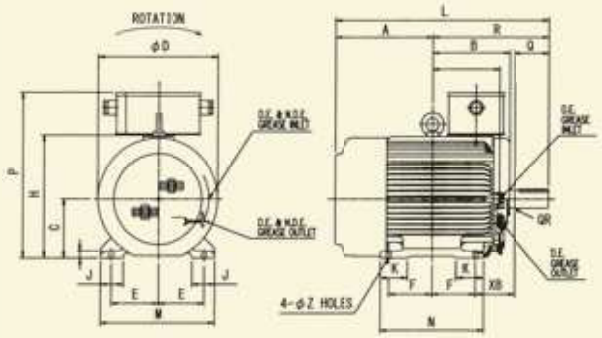

Fig. 5

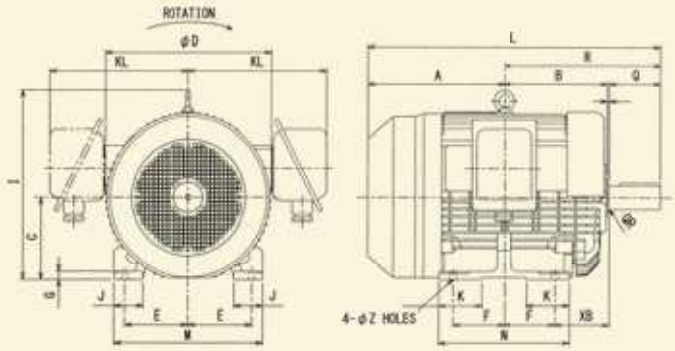

Fig. 4

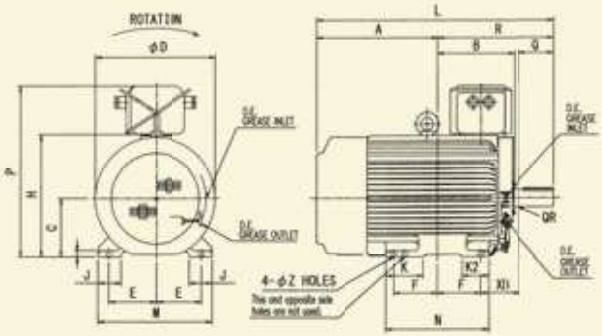

Fig. 6

SPECIFICATION AND DIMENSIONS

■ TYPE

Totally Enclosed Fan Cooled,
Splash Proof Type (Vertical Type) (IP44, IC411)
全閉防まつ形外扇付立形（IP44, IC411）

POLES	OUTPUT (kW)	SPEED (min⁻¹)	AMPS (A)	INSU. CLASS	BEARING N.D.E.	BEARING D.E.	MASS (kg)	FRAME NO.
2	0.4	3400	0.9	B	6203 ZZCM	6203 ZZCM	11.5	71
4	0.4	1700	1.0					
2	0.75	3450	1.5	B	6204 ZZCM	6204 ZZCM	16.5	80
4	0.75	1700	1.7					
6	0.4	1100	1.2				17.5	
2	1.5	3450	2.8	B	6205 ZZCM	6205 ZZCM	24.5	90L
2	2.2	3450	3.9					
4	1.5	1715	3.1					
6	0.75	1135	2				25	
4	2.2	1720	4.2	B	6205 ZZCM	6206 ZZCM	31	100L
6	1.5	1135	3.4				35	
2	3.7	3480	6.4	B	6206 ZZCM	6207 ZZCM	40	112M
4	3.7	1730	6.7				43	
6	2.2	1150	4.5					
8	1.5	850	3.8				48	
2	5.5	3490	9.2	B	6208 ZZCM	6308 ZZCM	64	132S
2	7.5	3490	12.1				72	
4	5.5	1740	9.8				63	
6	3.7	1160	7.4				64	
8	2.2	850	5.3				71	
4	7.5	1740	12.8	B	6208 ZZCM	6308 ZZCM	75	132M
6	5.5	1160	10.5				81	
8	3.7	850	9				91	
2	11	3520	18.2	B	6208 ZZCM	6310 ZZC3	107	160M
2	15	3520	24				118	
4	11	1750	18.8		6208 ZZCM	6310 ZZCM	110	
6	7.5	1160	13.6					
8	5.5	850	11.2				121	
2	18.5	3520	29	B	6208ZZCM	6310ZZC3	141	160L
4	15	1750	25		6208 ZZCM	6310 ZZCM	127	
6	11	1160	19.5				134	
8	7.5	860	15.1				147	
2	22	3540	36	B	6210ZZC3	6212ZZC3	180	180M
4	18.5	1755	31.5		6210 ZZC3	6310 ZZC3	165	
4	22	1755	36.5				175	
6	15	1170	26.5				170	
8	11	875	22.5					

POLES	OUTPUT (kW)	SPEED (min⁻¹)	AMPS (A)	INSU. CLASS	BEARING N.D.E.	BEARING D.E.	MASS (kg)	FRAME NO.
2	30	3540	48.5	F	6210ZZC3	6212ZZC3	200	180L
4	30	1755	49.5		6210 ZZC3	6312 ZZC3	205	
6	18.5	1170	32				190	
6	22	1170	38.5				205	
8	15	875	30					
2	37	3540	58	F	6312ZZC3	6312ZZC3	255	200L
2	45	3520	70				270	
4	37	1755	61.5		6312 ZZC3	6313 ZZC3	260	
4	45	1755	74				275	
6	30	1170	52.5				255	
6	37	1170	63				280	
8	18.5	875	36.5				255	
8	22	875	43				280	
2	55	3540	86	F	6312ZZC3	6312ZZC3	335	225S
4	55	1760	89		6212 ZZC3	6315 ZZC3	350	
6	45	1175	75				340	
8	30	870	56				365	
2	75	3570	117	F	6313C3	6312C3	580	250S
4	75	1780	121		6217 ZZCM	6218CM	600	
6	55	1185	91.2				590	
8	37	885	70.2				620	
2	90	3570	138	F	6313C3	6212C3	600	250M
4	90	1780	142		6217 ZZCM	6218CM	620	
6	75	1185	123				650	
8	45	885	84.6				640	
2	110	3565	169	F	6313C3	6312C3	660	280S
4	110	1780	172		6217 ZZCM	6218CM	680	
6	90	1185	150				690	
8	55	885	104				680	
2	132	3565	199	F	6313C3	6312C3	700	280M
4	132	1775	203		6217 ZZCM	6218CM	730	
6	110	1185	180				740	
8	75	885	140				750	
2	160	3570	243	F	6313C3	6214C3	1150	280MD
2	200	3575	304		6320CM	6220CM		
4	160	1785	247				1220	
4	200	1780	305				1270	
6	132	1185	215				1210	
6	160	1185	257				1320	
8	90	890	168				1220	
8	110	885	203				1300	

FRAME NO.	C	φD	FRANGE φLA	FRANGE φLB	FRANGE φLC	FRANGE LE	FRANGE LG	FRANGE φLZ	LF	KL	KL2	LL	LR	L	Q	φS	KEY W	KEY T	KEY U	QR	OUTLINE
71	—	150	130	110j6	160	3.5	9	10	122.5	146	85	250	30	280	30	14j6	5	5	3	1.3	Fig.1
80	—	170	165	130j6	200	3.5	10	12	120	156	85	269	40	309	40	19j6	6	6	3.5	0.5	
90L	—	202	165	130j6	200	3.5	10	12	118.5	170	85	313	50	363	50	24j6	8	7	4	0.5	
100L	283	202	215	180j6	250	4	11	14.5	133	174	105	342	60	402	60	28j6	8	7	4	0.5	Fig.2
112M	325	243	215	180j6	250	4	11	14.5	140	190	105	372	60	432	60	28j6	8	7	4	1.5	
132S	386	284	265	230j6	300	4	12	14.5	159	264	125	419	80	499	80	38k6	10	8	5	0.5	Fig.3
132M	386	284	265	230j6	300	4	12	14.5	178	264	125	457	80	537	80	38k6	10	8	5	0.5	
160M	426	323	300	250j6	350	5	14	18.5	213	284	125	544	110	654	110	42k6	12	8	5	2	
160L	426	323	300	250j6	350	5	14	18.5	235	284	125	588	110	698	110	42k6	12	8	5	2	
180M	502	382	350	300j6	400	5	15	18.5	241.5	335	—	618 621	110	728 731	110	48k6	14	9	5.5	0.5	Fig.4
180L	502	382	350	300j6	400	5	15	18.5	260.5	335	—	656 659	110	766 769	110	55m6	16	10	6	1.5	
200L	540	420	400	350j6	450	5	19	18.5	285.5	355	—	716 719	110 140	826 859	110 140	55m6 60m6	16 18	10 11	6 7	1.5	Fig.5
225S	584	464	500	450j6	550	5	22	18.5	292	375	—	729 732	110 140	839 872	110 140	55m6 65m6	16 18	10 11	6 7	1.5	
250S	700	535	500	450j6	550	5	22	18.5	425	513	—	1132 1027	110 140	1242 1167	110 140	75m6	16 20	10 12	6 7.5	1	Fig.6
250M	700	535	500	450j6	550	5	22	18.5	425	483	—	1132 1027	110 140	1242 1167	110 140	55m6 75m6	16 20	10 12	6 7.5	1	
280S	700	535	600	550js6	660	6	25	24	425	483 513	—	1132 1027	110 170	1242 1197	110 170	55m6 85m6	16 22	10 14	6 9	1	
280M	700	535	600	550js6	660	6	25	24	425	513 483	—	1132 1027	110 170	1242 1197	110 170	55m6 85m6	16 22	10 14	6 9	1	
280MD	830	640	740	680js6	800	6	30	24	565	548 578 610	—	1476 1477	140 170	1616 1647	140 170	65m6 95m6	18 25	11 14	7 9	1	Fig.7

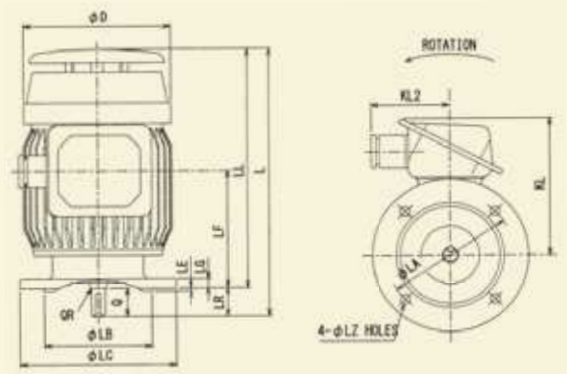

Fig. 1

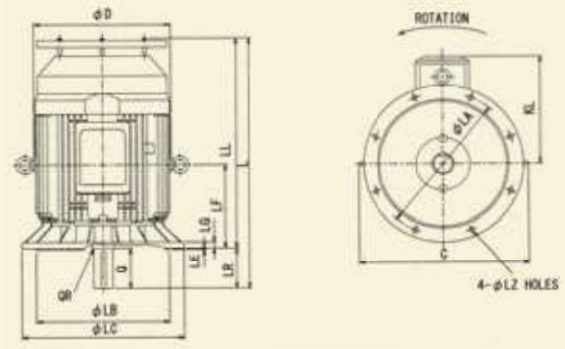

Fig. 5

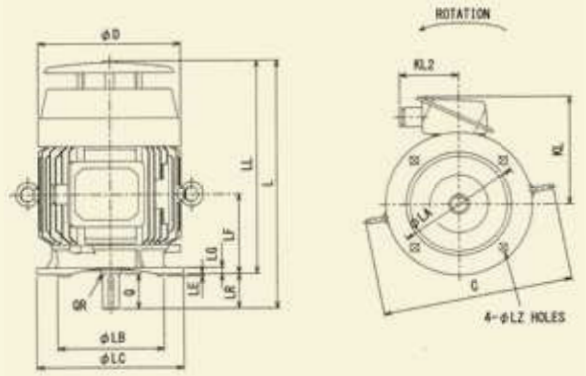

Fig. 2

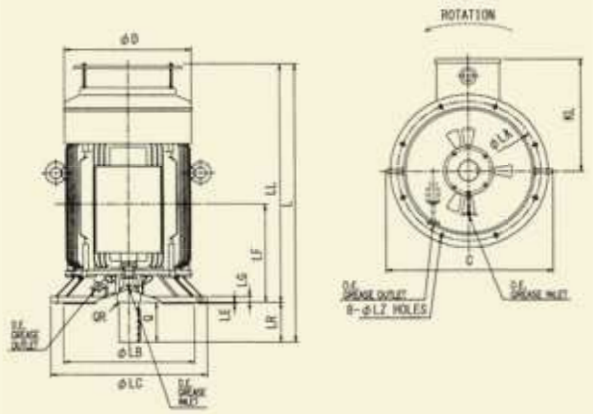

Fig. 6

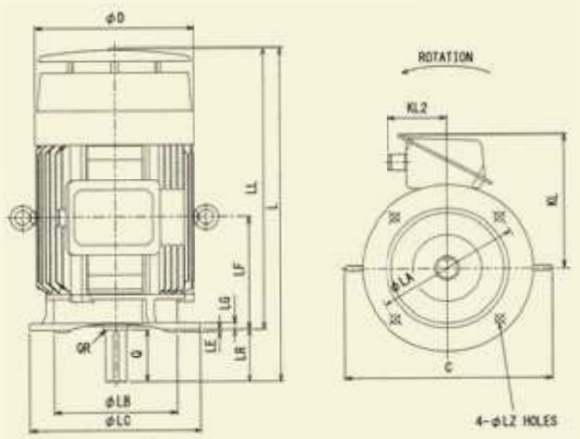

Fig. 3

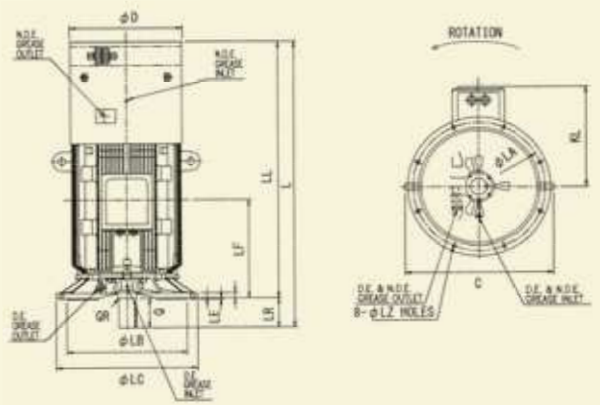

Fig. 7

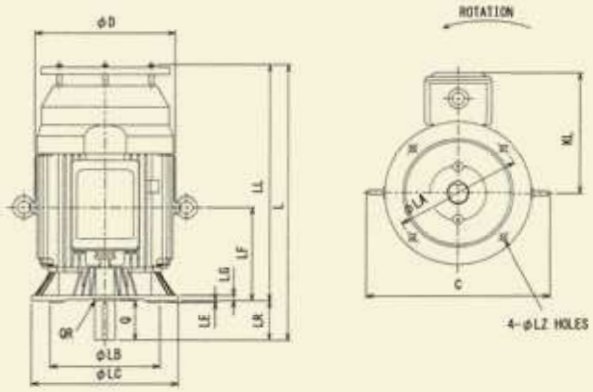

Fig. 4

SHAFT END

SPECIFICATION AND DIMENSIONS

■ TYPE

Protected Drip-proof Type (Horizontal Type) (IP22, IC01)

保護防滴形横型（IP22, IC01）

POLES	OUTPUT (kW)	SPEED (min⁻¹)	AMPS (A)	INSU. CLASS	BEARING N.D.E.	BEARING D.E.	MASS (kg)	FRAME NO.
2	75	3525	115	F	6212C3	6313C3	320	225S
4	75	1750	118		6213 ZZCM	6218C3		
6	55	1170	90					
8	37	875	63					
2	90	3525	137	F	6212C3	6313C3	360	225M
4	90	1755	141		6213 ZZCM	6218C3		
6	75	1170	122					
8	45	875	77					
2	110	3530	171	F	6313C3	6313C3	460	250S
4	110	1760	176		6213 ZZCM	6220C3		
6	90	1170	150					
8	55	875	98					

POLES	OUTPUT (kW)	SPEED (min⁻¹)	AMPS (A)	INSU. CLASS	BEARING N.D.E.	BEARING D.E.	MASS (kg)	FRAME NO.
2	132	3540	205	F	6313C3	6313C3	510	250M
4	132	1755	209		6313 ZZCM	6220C3		
6	110	1175	183					
8	75	875	133					
2	160	3535	250	F	6313C3	6313C3	630	280S
4	160	1770	245		6315CM	6222C3		
6	132	1175	212					
8	90	875	155					
2	200	3540	310	F	6313C3	6313C3	690	280M
4	200	1770	305		6315CM	6222C3		
6	160	1175	255					
8	110	880	193					

FRAME No.	A	B	C	D	E	F	G	H	J	K	L	M	N	P	Q	R	φS	KEY W	KEY T	KEY U	φZ	XB	QR	OUTLINE
S225S	360.5	287	225	460	178	143	22	460	80	90	762.5 792.5	416	341	610 690	110 140	402 432	55m6 75m6	16 20	10 12	6 7.5	18.5	149	1.2	Fig.1
S225M	400.5	299.5	225	460	178	155.5	22	460	80	90	815 845	416	366	610 690	110 140	414.5 444.5	55m6 75m6	16 20	10 12	6 7.5	18.5	149	1.2	
S250S	433.5	318.5	250	520	203	155.5	25	515	100	110	867 927	486	380	655 745	110 170	433.5 493.5	55m6 85m6	16 22	10 14	6 9	24	168	1.2	Fig.2
S250M	452.5	337.5	250	520	203	174.5	25	515	100	110	905 965	486	420	745	110 170	452.5 512.5	55m6 85m6	16 22	10 14	6 9	24	168	1.2	
S280S	460	369	280	580	228.5	184	28	575	110	120	944 1004	560	440	805	110 170	484 544	55m6 95m6	16 25	10 14	6 9	24	190	1.2	
S280M	485.5	394.5	280	580	228.5	209.5	28	575	110	120	995 1055	560	490	805 840	110 170	509.5 569.5	55m6 95m6	16 25	10 14	6 9	24	190	1.2	

SHAFT END

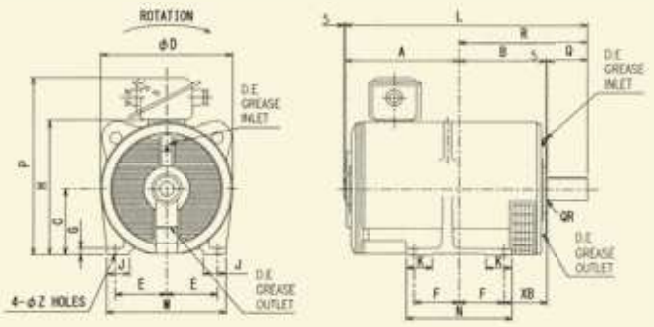

Fig. 1

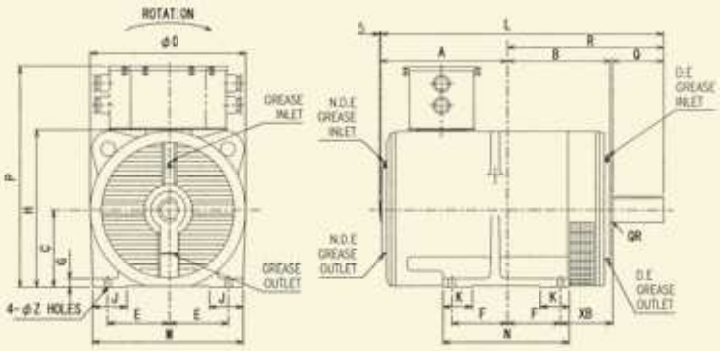

Fig. 2

SPECIFICATION AND DIMENSIONS

■ TYPE

Protected Drip-proof Type (Vertical Type) (IP22, IC01)

保護防滴形立型(IP22, IC01)

POLES	OUTPUT (kW)	SPEED (min⁻¹)	AMPS (A)	INSU. CLASS	BEARING N.D.E.	BEARING D.E.	MASS (kg)	FRAME NO.
2	75	3525	115	F	6212C3	6313C3	380	225S
4	75	1750	118		6213 ZZCM	6218C3		
6	55	1170	90					
8	37	875	63					
2	90	3525	137	F	6212C3	6313C3	420	225M
4	90	1755	141		6213 ZZCM	6218C3		
6	75	1170	122					
8	45	875	77					
2	110	3530	171	F	6313C3	6313C3	530	250S
4	110	1760	176		6213 ZZCM	6220C3		
6	90	1170	150					
8	55	875	98					

POLES	OUTPUT (kW)	SPEED (min⁻¹)	AMPS (A)	INSU. CLASS	BEARING N.D.E.	BEARING D.E.	MASS (kg)	FRAME NO.
2	132	3540	205	F	6313C3	6313C3	530	250M
4	132	1755	209		6313 ZZCM	6220C3		
6	110	1175	183					
8	75	875	133					
2	160	3535	250	F	6313C3	6313C3	710	280S
4	160	1770	245		6315CM	6222C3		
6	132	1175	212					
8	90	875	155					
2	200	3540	310	F	6313C3	6313C3	710	280M
4	200	1770	305		6315CM	6222C3		
6	160	1175	255					
8	110	880	193					

FRAME No.	φD	FLANGE φLA	FLANGE φLB	FLANGE φLC	FLANGE LE	FLANGE LG	FLANGE φLZ	LF	KL	LL	LR	L	Q	φS	KEY W	KEY T	KEY U	QR	OUTLINE
S225S	480	500	450j6	550	5	22	18.5	513	465 385	799	110 140	909 939	110 140	55m6 75m6	16 20	10 12	6 7.5	1.2	Fig.1
S225M	480	500	450j6	550	5	22	18.5	513	465 385	799	110 140	909 939	110 140	55m6 75m6	16 20	10 12	6 7.5	1.2	
S250S	545	600	550js6	660	6	25	24	608	415 495	930	110 170	1040 1100	110 170	55m6 85m6	16 22	10 14	6 9	1.2	
S250M	545	600	550js6	660	6	25	24	608	495	930	110 170	1040 1100	110 170	55m6 85m6	16 22	10 14	6 9	1.2	
S280S	610	600	550js6	660	6	25	24	667	525	1014	110 170	1124 1184	110 170	55m6 95m6	16 25	10 14	6 9	1.2	
S280M	610	600	550js6	660	6	25	24	667	560 525	1014	110 170	1124 1184	110 170	55m6 95m6	16 25	10 14	6 9	1.2	

SHAFT END

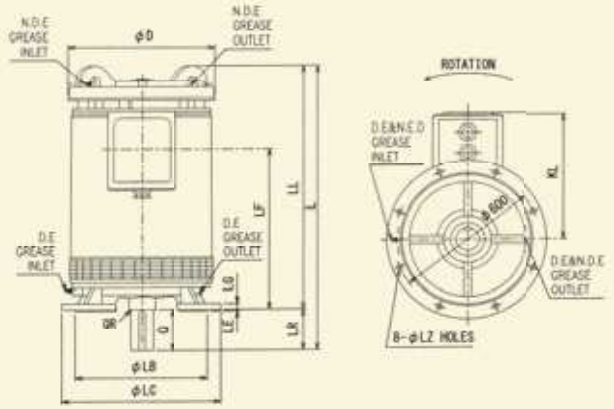

Fig. 1

NISHISHIBA ELECTRIC CO., LTD.
西芝電機株式会社

■ HEAD OFFICE, FACTORY & BRANCHES

Head Office & Factory
1000 Hamada, Aboshi-ku,
Himeji 671-1280, Japan.
Phone: Himeji +81-79-271-2448
Facsimile: +81-79-271-2305

Tokyo Branch
72-34, Horikawa-cho, Saiwai-ku,
Kawasaki 212-8585, Japan.
Phone: Kawasaki +81-44-542-2400
Facsimile: +81-44-542-2405

Osaka Branch
29th Fl., Umeda Sky Building West Tower,
1-30, Oyodonaka 1-chome, Kita-ku, Osaka 531-6129, Japan.
Phone: Osaka +81-6-4797-2448
Facsimile: +81-6-4797-2453

Hiroshima Branch
Grand Building Otemachi, 11-2, Otemachi 2-chome, Naka-ku,
Hiroshima 730-0051, Japan.
Phone: Hiroshima +81-82-244-1830
Facsimile: +81-82-247-4098

Fukuoka Branch
Toshiba Fukuoka Building, 4-1, Nagahama 2-chome, Chuo-ku,
Fukuoka 810-0072, Japan.
Phone: Fukuoka +81-92-722-2448
Facsimile: +81-92-722-2300

■ 本社、工場、支社、支店

本社・工場
〒671-1280
兵庫県姫路市網干区浜田1000番地
Tel:(079)271-2448(代)
Facsimile:(079)271-2305

東京支社
〒212-8585
神奈川県川崎市幸区堀川町72番地34(ラゾーナ川崎東芝ビル)
Tel:(044)542-2400(代)
Facsimile:(044)542-2405

関西支社
〒531-6129
大阪府大阪市北区大淀中1丁目1番30号(梅田スカイビル タワーウエスト29階)
Tel:(06)4797-2448(代)
Facsimile:(06)4797-2453

中国支店
〒730-0051
広島県広島市中区大手町2丁目11番2号(グランドビル大手町)
Tel:(082)244-1830(代)
Facsimile:(082)247-4098

九州支店
〒810-0072
福岡県福岡市中央区長浜2丁目4番1号(東芝福岡ビル)
Tel:(092)722-2448(代)
Facsimile:(092)722-2300

http://www.nishishiba.co.jp

安全に関するご注意
Safety Precautions

●正しく安全にお使いいただくために、ご使用の前に必ず取扱説明書をよくお読み下さい。
● Operators should read the INSTRUCTION MANUAL before starting operation on safe use of the product.

●資料の内容は、お断りなしに変更することがありますのでご了承下さい。
●The data given in this catalogue are subject to change without notice.

MM03-18.08.200Ⓢ